An experimental study on the cavity evolution of a continuous entry of sphere through a viscous fluid into water

[1]Sun Tiezhi*;[1]Wang Heng;[1,2,3]Zhang Guiyong; [1,2,3]Zong Zhi; [1]Li Haitao

[1]Dalian University of Technology, Dalian, Liaoning Province, China;

[2]State Key Laboratory of Structural Analysis for Industrial Equipment, Dalian, Liaoning Province, China;

[3]Collaborative Innovation Center for Advanced Ship and Deep-Sea Exploration, Shanghai, China

Abstract

In the present paper, cavity evolution of a continuous entry of sphere through dimethicone into water was studied experimentally in DLUT (Dalian University of Technology) Marine Hydrodynamics Laboratory. High-speed video was used to capture the movement sequences of the sphere and cavity evolution. Firstly, we conducted a vertical entry case of the sphere dropped from 0.7m above the free surface. After the entire sphere submerged under the free surface, the splash crown and subsurface air cavity began to form. It was important to note that a continuous cavity appeared at the interface of the dimethicone and water. Furthermore, the influence of various parameters, specifically the thickness of the dimethicone layer, were studied. One of the most interesting results was that relationship was found between the thickness of the dimethicone layer and the pitch off time. The interaction between the sphere and the cavity was also noted. These would help to understand the water entry problem with the change in fluid properties.

Keywords: water entry; dimethicone; cavity evolution; pitch off

Introduction

It is well known that considerable efforts have been devoted to addressing the water entry problems due to its wide applications including industry, sport, biology and military. The water entry of objects present a rich physical phenomenon, address the flow and evolution mechanism of water entry cavity is a goal that researchers have long been pursuing.

The earliest experimental study of water entry problems can be found in Worthington and Cole[1][2], they used single-spark photography to investigate cavity shape through the vertical entry of a sphere into the water. In the 1950s, May[3] was the first to describe this buckling instability and found the surface seal phenomena. He described it as 'ribbon-like filaments' appearing just prior to surface seal. With the developments in high-speed imaging technology, recent studies have attributed to better and further understanding of transient cavity dynamics. Duez et *al*.[4] investigated the effect of liquid properties and sphere wettability on the threshold velocity of cavity entrainment. They demonstrated that the wettability of the impacting body was a key factor in determining the degree of splashing. Their novel understanding provided a new perspective for impacts on the free surface. In addition to these studies, other notable works pertaining to water entry problems. Shi *et al*.[5] analyzed supercavitation induced by high-speed water entry of projectiles at the velocity of 342 m/s and found the 'pull-away' of the cavity beneath the water surface. Gekle *et al*.[6] found the unique effect of capillary ripples on cavity dynamics and two asymptotic regimes separated by discrete jumps for the scaled pinch-off depths. Zhao *et al*.[7] used high-speed photography technology investigated an experimental study of an axisymmetric slender body. They found that the impact between the tail of slender body and supercavity wall resulted in the rotation of the slender body.

Spheres are used as the most simple and representative objects to investigate water entry problems. However, usually, this canonical shape impacting on the free surface does not yield simple hydrodynamic characteristics[8]. Truscott *et al*. [8] experimentally investigated the complex hydrodynamics of water entry by a spinning sphere for low Froude numbers. They found the cavity dynamics and splash are highly altered for the spinning case compared to a sphere without spin. To address the physical characteristics involved in the evolution of cavity, Yan *et al*.[9] conducted an experiment of water entry with freely dropping spheres. Jeffrey et al. conducted theoretical and experimental

*Corresponding Author, Tiezhi Sun: suntiezhi@dlut.edu.cn

investigation on the vertical impact of low-density spheres on a water surface. The sphere dynamics and the effect of its deceleration on the shape of the resulting air cavity were analyzed systematically. More recently, Marston *et al.* [10]presented new observations by an experimental investigation of the sealing phenomena and crown splash observed during the impact of spheres onto quiescent liquid pools, and they varied the ambient pressure, liquid properties and sphere diameter.

However, little studies have been carried out on the effect of variable liquid properties such as surface tension and density during the process of the cavity formation, evolution and jet. In order to address these characteristics, in this paper, we present new phenomena from an experimental investigation of the cavity dynamics during the continuous entry of sphere through high viscous liquid into water.

Experimental setup

A schematic of the experimental setup used in present study is shown in figure 1. We used a billiard ball to perform the experiment. The ball's diameter *d* is 5.72cm, the mass is 0.18kg, and the surface roughness is P1000. The dimensions of this reinforced glass tank is 0.8m×1.0m×1.5m (width × depth × height), and a plexiglass tube is vertically mounted above the tank. In the experiments, there is a layer of high viscous dimethicone on the top of the water, whose density is 941kg/m^3, and dynamic viscosity is 0.01Pa s. High-speed video was used to record the movement sequences of the sphere and cavity evolution. The frame rate is 1000 fps with an image resolution of 1280×800 pixels and the exposure time is 0.001s. Due to the higher frame rate and shorter exposure time, the intensity of illumination needs to be increased appropriately to ensure the clarity of the images in this experiment. Thus, two Starison CE-1500WS spotlights were set up on both sides of the high-speed camera to ensure the quality of the captured images. After a series of image processing, the cavity formation, development, pitch-off and jet can be obtained.

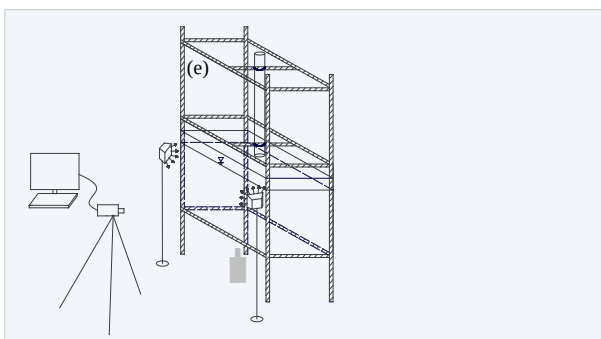

Figure 1. Schematic of the experimental setup used in the present study (Figure is not to scale)

Results and discussion

To address the special phenomenon in a practical evolution process using high-speed visualization, we measured the pinch-off time and captured the cavity shape evolution under various parameters: the thickness of dimethicone is 0mm, 5mm, 10mm, 15mm, 20mm, 25mm and 30mm respectively.

Figure 2 shows the sequence of images depicting the splash and air cavity formed in the wake of the sphere impacting the dimethicone and water. Herein, the thickness of dimethicone is $h = 10$ mm, the initial impact velocity is $V_0 = 3.7$ m/s and the Froude number is $Fr = V_0 / \sqrt{gD} = 4.95$, where g is the acceleration of gravity, D is the diameter of the sphere, respectively. It is apparent that an initial jet of fluid forms as the sphere impacts the free surface and continues to extend outwards as the sphere descends into the dimethicone. At *t*=7ms, the sphere has passed the layer of dimethicone and into the water. From *t*=7ms to *t*=50ms, we can see that the jet transitions from outwards to upwards growth and the splash crown appears near the free surface. The subsurface air cavity grows outwards and elongates vertically as the sphere descends. From *t*=80ms to *t*=100ms, the subsurface air cavity is still open to the atmosphere. A low pressure induced by the air flows into the splash, which results in driving the splash curtain inwards. Meanwhile, the cavity below the free surface shrinks gradually. At *t*=105ms, the pitch off phenomenon occurs and the subsurface air cavity is splited？？ into two distinct cavities. After pinch off, distinct jets of fluid eject away from the

point of pinch-off in opposite directions. One of the most interesting results for the cavity evolution of a continuous entry of sphere through viscous liquid into water is that the characteristics of the buckling instability. In the experiments by Marston *et al*.[10], they found that the crown has collapsed in on itself with a significantly reduced neck radius in the upper region and the crown wall appears more-or-less vertical in perfluorohexane. However, interestingly, the expansion and contraction of the crown radius appear in the present study. In other words, the shape of the crown wall like a 'drum' (as shown in Figure 2(d)).

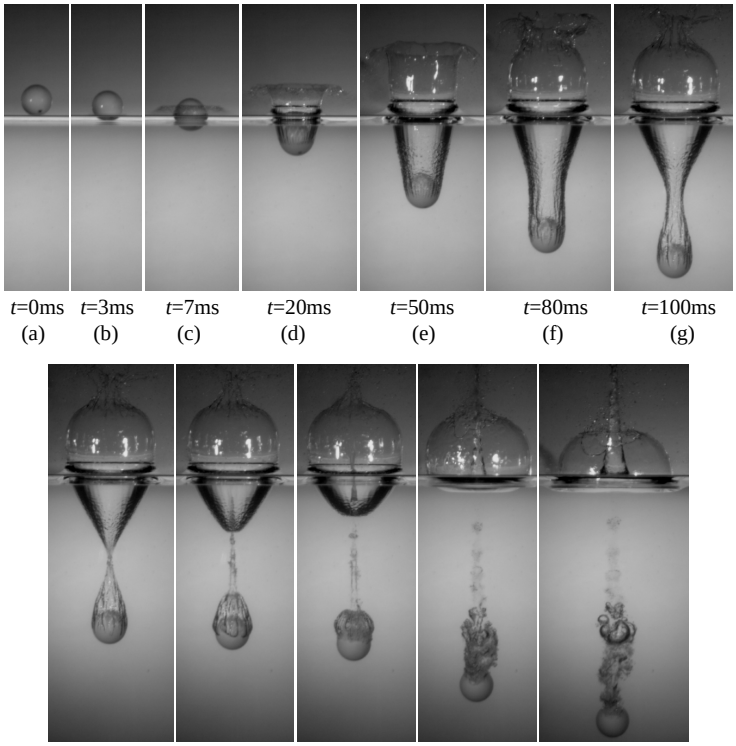

Figure 2. A sequence of images depicting the splash and air cavity formed in the wake of the sphere impacting the dimethicone and water, the initial impact velocity is $V_0 = 3.7$ m/s, the Froude number is $Fr = 4.95$

Figure 3 presents the images at the moments of pinch off for the seven thicknesses of dimethicone, where the moment of pinch-off is taken when the subsurface air cavity has completely necked down. All the impact velocity is the same, where $V_0 = 3.7$. We can see that the depth of pinch-off distances almost are fundamentally similar. Moreover, we note that the thickness of the dimethicone appears to have no effect on cavity pinch-off time. For all the cases, the pinch-off time is 105ms.

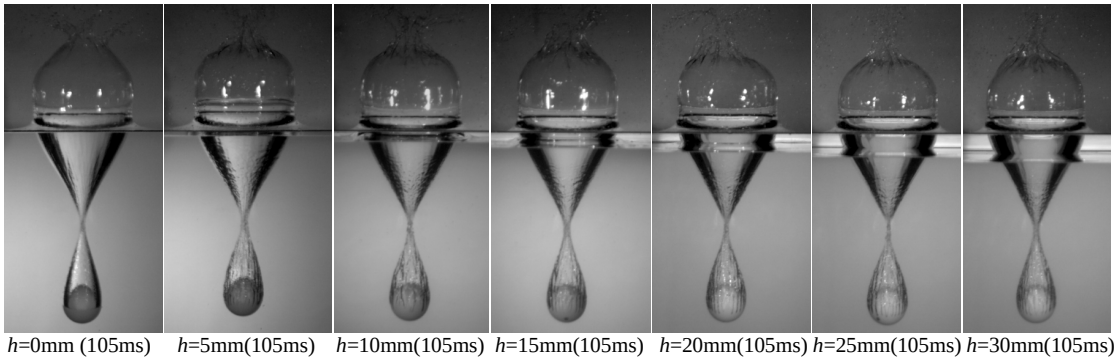

Figure 3. A comparison of the formed cavity at the moment of pinch-off with increasing the thickness (left to right) of dimethicone ($V_0 = 3.7$ m/s, $Fr = 4.95$), the first frame is 0mm, subsequent frames are 5mm apart.

Conclusion

In this paper, we experimentally investigated the well-known crown splash during a continuous entry of sphere through a viscous fluid into water. Using high-speed videography, we have provided a detailed cavity evolution. One of the most interesting results in the present study is that the shape of the crown wall looks like a 'drum'. Furthermore, the pinch-off time is dependent on the thickness of dimethicone above the water at a certain drop height of the sphere.

Acknowledgement

This work was supported by the National Natural Science Foundation of China (51709042, 51679037, 51639003, 51579042), the Recruitment Program of Global Young Experts (D1007001) and the Fundamental Research Funds for the Central Universities (DUT16RC(3)085, DUT17ZD311, DUT16ZD218).

References

[1] Worthington, A. M., & Cole, R. S. (1897). *Impact with a liquid surface studied by the aid of instantaneous photography*. Philosophical Transactions of the Royal Society of London. 189, 137-148.

[2] Worthington, A. M., & Cole, R. S. (1900). *Impact with a liquid surface studied by the aid of instantaneous photography. paper II*. Philosophical Transactions of the Royal Society of London. 194, 175-199.

[3] May, A. (1952). *Vertical entry of missiles into water*. Journal of Applied Physics. 23(12): 1362-1372.

[4] Duez, C., Ybert, C., Clanet, C., & Bocquet, L. (2007). *Making a splash with water repellency*. Nature Physics. 3(3), 180-183.

[5] Shi, H. H., Itoh, M., & Takami, T. (2000). *Optical observation of the supercavitation induced by high-speed water entry*. Journal of Fluids Engineering, 122(4), 806-810.

[6] Gekle, S., Van, d. B. A., Bergmann, R., Van, d. M. D., & Lohse, D. (2008). *Noncontinuous Froude number scaling for the closure depth of a cylindrical cavity*. Physical Review Letters, 100(8), 084502.

[7] Zhao, C. G., Wang, C., Wei, Y. J., & Zhang, X. S. (2015). *An experimental study on characteristics of cavitation and ballistic of axisymmetric slender body underwater movement*. Journal of Physics: Conference Series. IOP Publishing, 656,012175.

[8] Truscott, T. T., & Techet, A. H. (2009). *Water entry of spinning spheres. Journal of Fluid Mechanics*. 625(625), 135-165.

[9] Yan, H., Liu, Y., Kominiarczuk, J., & Yue, D. K. P. (2009). *Cavity dynamics in water entry at low Froude numbers*. Journal of Fluid Mechanics. 641(641), 441-461.

[10] Marston, J. O., Truscott, T. T., Speirs, N. B., Mansoor, M. M., & Thoroddsen, S. T. (2016). *Crown sealing and buckling instability during water entry of spheres*. Journal of Fluid Mechanics. 794, 506-529.